https://doi.org/10.33271/nvngu/2025-3/131

V. Tytiuk[1],
orcid.org/0000-0003-1077-3288,
D. Mrachkovskyi[2],
orcid.org/0000-0003-2811-0677,
O. Chornyi[3],
orcid.org/0000-0001-8270-3284,
V. Kuznetsov[*4],
orcid.org/0000-0002-8169-4598,
M. Tryputen[5],
orcid.org/0000-0003-4523-927X,
G. Sivyakova[1],
orcid.org/0000-0001-7689-8433

1 – Non-profit joint-stock company "Karaganda Industrial University", Temirtau, the Republic of Kazakhstan
2 – Kryvyi Rih National University, Kryvyi Rih, Ukraine
3 – Kremenchuk Mykhailo Ostrohradskyi National University, Kremenchuk, Ukraine
4 – Ukrainian State University of Science and Technologies, Dnipro, Ukraine
5 – Dnipro University of Technology, Dnipro, Ukraine
[*] Corresponding author e-mail: witjane20002014@gmail.com

ASSESSMENT OF HUMAN-OPERATOR'S INFLUENCE ON TECHNICAL AND ECONOMIC INDICATORS OF THE EXCAVATOR PRODUCTION CYCLE

Purpose. Determining the influence of the parameters of the human-operator transfer function on the duration of the technological operation and the cyclic energy consumption of the electromechanical system of a straight shovel excavator equipped with electric drives of various types in order to further improve the human-machine control system of open-pit excavators by compensating for the inertia and nonlinearity of the human-operator characteristics.

Methodology. Mathematical modeling of the human-machine control system of an excavator equipped with electric drives of various types, taking into account the dynamic characteristics of the human-operator, establishing regression dependencies of technical and economic indicators of the excavator on the parameters of the equivalent transfer function of the human-operator using design of experiments.

Findings. The mathematical models of closed-loop control systems for the position of the bucket of a "straight shovel" excavator with an electric drive according to the Leonard system and a thyristor converter-motor electric drive have been implemented, which differ in that their structure takes into account the nonlinearity and inertia of the human operator and its influence on the performance of the human-machine system. Using the methods of the theory of experiment planning, we obtained regression dependences of the duration of the technological cycle and cycle energy consumption on the values of the time constant and the delay constant, which characterize the current state of the human-operator. The obtained regression models made it possible to evaluate the importance of the influence of various psycho-physiological factors of the human-operator on the technical and economic indicators of the excavator production cycle, which can serve as the basis for further optimization of the operation of mining excavators.

Originality. For the first time, mathematical models of the electromechanical system of an excavator according to the "straight shovel" scheme are proposed, including models of electric drives of the main mechanisms, a model of the mechanical part of the excavator and a model of a human-operator, which made it possible to increase the accuracy of determining the energy consumption of the excavator and the time of the operating cycle. The regression models of technical and economic indicators of the excavator production cycle on the delay and inertia of the human-operator were obtained. It was found that the more influential factor is the transportation delay.

Practical value. Mathematical models of an excavator with an electric drive based on the generator-motor system and an electric drive based on the thyristor converter-motor-motor system have been developed, including a model of the mechanical part of the excavator and a model of a human-operator. Regression models of the dependence of the duration of the excavator production cycle and its energy consumption on the delay and inertia of the human-operator are obtained. The proposed implementation of the human-machine excavator control system creates prerequisites for further increasing the level of automation of mining excavators.

Keywords: *human-machine system, operator, excavator "direct shovel", working cycle*

Introduction. Technical progress contributed to the shift in the functional role of human from a direct executor to operator, whose primary function is to control and manage ergatic production processes in industry, transportation, and energy sectors [1].

Ergatic systems are widely used in modern industrial production. A typical example of such systems in the mining industry are excavators of various types, drilling rigs and other mining equipment, operated by a human-operator [2].

The presence of the "human factor" in ergatic systems is often considered as a drawback, and this statement has certain justifications. From 40 to 80 % of accidents and emergencies in various fields of activity occur due to the human factor, resulting from a lack of preparedness, unfavorable psychological factors and fatigue [3, 4].

In the ergatic systems of the mining industry, the negative impact of the human-operator manifests in the influence of their qualifications on the technical and economic indicators of production processes.

In [5], analytic data provided by U.S. Department of Energy (DOE) on energy consumption in the U.S. min-

ing industry is presented. There is potential to reduce annual energy consumption from 365 billion kWh per year to 169 billion kWh per year, which is about 46 % of the current annual energy consumption. Among the various factors affecting the energy consumption of mining equipment, operator practice and performance are likely to be the most cost-effective factors to improve. Training operators to improve their performance is a relatively inexpensive and effective approach in many cases [5].

The work [6] is dedicated to statistical research of indicators of the energy efficiency performance of mining equipment operators. It has been shown that a low level of qualification of excavator operator qualification can lead to an increase in specific energy consumption by 30–40 % [6].

The excavator operator not only determines the optimal trajectory of the excavator's working elements but also executes a sequence of actions aimed at implementing the selected trajectory. He is an important part of the control system and functions as a complex mechanism that processes information from various sources. The excavator operator receives and evaluates external data, analyzes and converts it into control commands based on his skills and knowledge. The operator performs the dual task of developing the optimal trajectory of movement of the excavator's working elements and implementing this trajectory by controlling the electric drives of individual mechanisms.

Abstracting from the problem of developing the optimal trajectory of the excavator movement, in a closed-loop control system for the excavator's operation, the human-operator should be considered as a nonlinear non-stationary dynamic component of the control system, as illustrated in Fig. 1.

In this regard, the task of developing mathematical models of closed-loop control systems for ergatic mechatronic systems of mining machines, which take into account the influence of the human-operator in the direct control loop, will increase the accuracy and reliability of studying the energy processes of such systems. This defines the relevance of the research. The relevance of solving this problem becomes particularly significant with the modernization of both the power equipment of excavator electric drives and the technical control tools.

Literature review. An analysis of modern scientific and technical literature demonstrates significant interest of researchers in various issues related to the excavator operation. The work [7] is dedicated to solving the direct and inverse kinematics problem of the mechanical part of the excavator using the "backhoe" scheme.

The work [8] is devoted to the analysis of human reliability to reduce and eliminate human errors, thereby

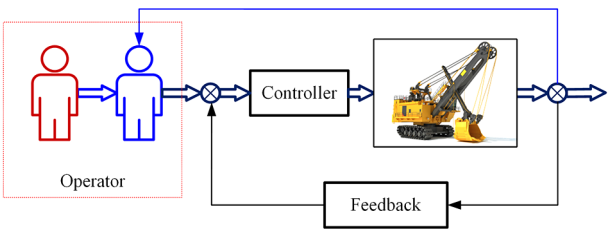

Fig. 1. Enlarged structural diagram of the excavator's ergatic control system

increasing the reliability of human-machine systems. Both qualitative and quantitative approaches are used to determine operator errors and the contexts in which tasks are performed. In order to ensure that human reliability analysis results objectively assess human behavior, the quantitative assessment of human error probability is based on a qualitative analysis of human factors and task contexts, which is further refined using performance-shaping factors.

According to [9], in the context of Industry 4.0, the study of human-machine interaction dynamics and its impact on production efficiency is a key issue. The concept of the "Operator 4.0", i.e. an operator integrated into a cyber-physical system, requires an in-depth analysis of human reliability, including an assessment of human error probability (HEP) while considering various aspects of the work environment.

In [9], it is noted that the value of human error probability is influenced by such psychophysiological characteristics of human-operator behavior, such as reaction delay, dependence of characteristics on control objectives, non-stationarity of operator characteristics, and significant nonlinearity and stochastic nature of operator characteristics.

In [10], it was established that employees can harm a company due to human errors. Human errors are closely related to employee reliability level; low level of employee reliability leads to defects in finished products. This study is a qualitative descriptive study using the Human Error Assessment and Reduction Technique (HEART) to determine operator reliability level.

The work [11] systematically examines gesture recognition or motion capture technologies and the use of gesture data in ergonomic assessment, strategies for managing complex equipment based on operator gesture and motion identification. An optimization algorithm is developed to find the best solution by minimizing the ergonomic score function RULA and the cycle time of each assembly workstation, considering worker capabilities.

In [12], the delay of a simple psychophysiological (visual-motor) response (SPPR) was studied as a function of the waiting time, which was the interval between the previous response and the next stimulus. The sequential approximation was used for the obtained monotonic dependence. The delay included at least two components.

Operator control actions have a complex psychophysiological nature, and two main components of the operator's response are distinguished [13, 14]:

- deterministic, which corresponds to the response to the input signal of a dynamic element equivalent to a human-operator;
- remnant (residue), which is the difference between the actual input signal of the operator and the response of the linear model.

The statistical parameters of this component significantly depend on the type of input signal, task complexity, and ergonomic characteristics of the workplace (operator fatigue) and can vary significantly over time. However, the cited works lack numerical characteristics of the dynamic model of the operator.

The mathematical model of the ergatic system operator should integrate a wide range of biochemical, phys-

ical, and psychophysiological factors. The structural and parametric identification of this model can be performed based on experimental research data.

The presence of a large number of empirical coefficients in these models, which vary over a wide range, and their identification based on psychophysical measurements, is a complex scientific and technical task.

In modern scientific literature, various approaches to solving the problem of identifying the mathematical model of an operator are known.

One of the most common, but not the only, approach to solving the problems of dynamic identification of control objects is the use of proven algorithms implemented in the System Identification Toolbox® library by MathWorks [15].

In [16], the features of operator modeling using C*-algebras are considered.

The work [17] is devoted to the problem of parameter identification of Wiener nonlinear dynamical systems with moving average noise. To improve the convergence rate, a gradient iterative algorithm is proposed, that replaces unmeasured variables with their corresponding iterative estimates and iteratively calculates noise estimates based on the obtained parameter estimates.

In [18], a maximum likelihood estimation algorithm was developed for estimating the parameters of nonlinear controlled Hammerstein controlled autoregressive moving average (CARARMA) systems using Newton iteration.

The work [19] is devoted to comparing the efficiency of modified versions of metaheuristic algorithms in the identifying structural dynamic systems. The study considered the genetic algorithm, the ant colony optimization algorithm, and the artificial bee colony algorithm. Some of these algorithms belong to evolutionary algorithms, while others to swarm algorithms. Simulation results show that the proposed algorithms provide excellent parameter estimation even with a small number of measurements and high noise levels.

The article [20] presents the first version of the Matlab Nonparametric System Identification Toolbox. The library includes both standard nonparametric methods (based on kernels or orthogonal decompositions) and new algorithms, including hybrid (parametric-nonparametric) algorithms. The study considers Hammerstein and Wiener models and their sequential connections.

In [21], the SIT (System Identification Toolbox ®) library was used for parametric identification of the human pilot behavior model during flight control on the X-Plane flight simulator.

In the article [22], the SIT (System Identification Toolbox ®) library was used to obtain a mathematical model of a loss-in-weight feeder used in cement production process.

In [23], new developments for identifying continuous-time systems with fractional-order models were proposed.

Purpose of the work. The purpose of the work is to determine the impact of human-operator mathematical model characteristics on the technical and economic performance indicators of the excavator's operating cycle.

To reach the set purpose, it is necessary to solve the following tasks:

- to develop a dynamic mathematical model that describes the nonlinearity and inertia of the human-operator, perform parametric identification of this dynamic model;
- to develop mathematical models of a closed-loop control system for an excavator with different types of electric drives, containing a dynamic model of a human-operator in the control loops of the main mechanisms of the excavator;
- to use experimental design methods to determine regression dependencies for energy consumption and production cycle duration on the parameters of the operator's transfer function.

Experimental study of the human-operator dynamic model and its identification. This study examined an operator action model featuring two input signals and two output signals.

Two sets of experiments were conducted. In these experiments, the operator was required to respond to two inconsistent step signals that changed at random times. A total of 20 experiments were carried out to collect data for subsequent statistical analysis.

The Logitech F310 gamepad joystick was used as the control device, and the operator's actions were recorded using MATLAB/Simulink. Fig. 2 shows the block diagram of the model, which is configured for real-time operation.

Fig. 3 shows an option of the operator's response to input signals during the experimental study.

Several alternative hypotheses regarding the structure of the operator's dynamic model were explored by considering different transfer function variants, as shown in Table 1.

For each experimental series, the transfer function parameters and the determination coefficient of each dynamic operator model were identified in accordance with Table 1.

To perform structural and parametric identification of the dynamic model of the operator, the built-in function process of the SIT (System Identification Toolbox ®) library of MATLAB software was used.

As a conclusion based on the results of the experimental study, we formulate the following statement: in the simplest one-dimensional version of the tracking problem, the dynamic mathematical model of the human-operator can be represented in the form of an aperiodic link with a delay of the following form

$$G(s) = \frac{K_P}{1 + T_{P1} \cdot s} \cdot e^{-T_d \cdot s}.$$

By knowing the transfer function of the deterministic component of the human-operator response, as expressed in equation (1), the instantaneous deviation of the operator's actual response from this deterministic

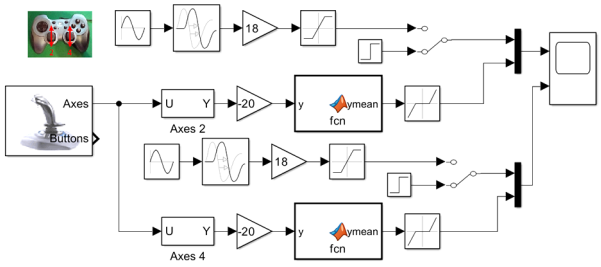

Fig. 2. MATLAB/Simulink model for recording operator actions during experimental research

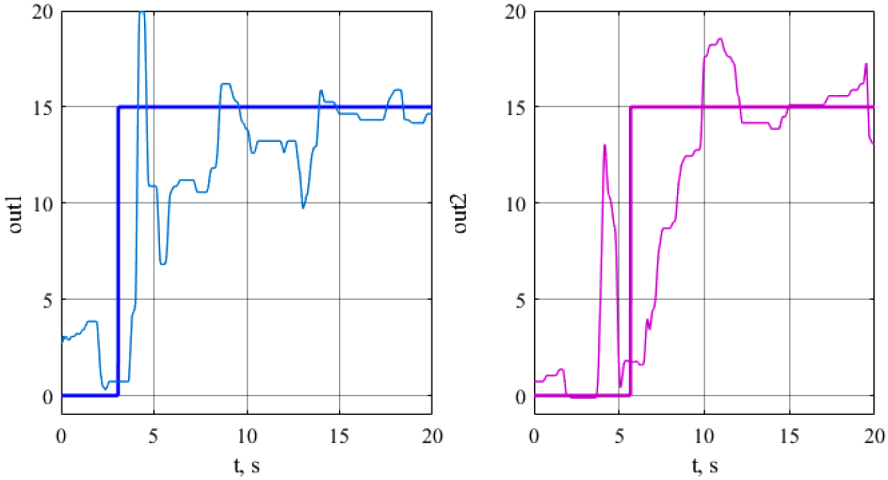

Fig. 3. An example of operator actions recording in response to a step input during an experimental study

Table 1

Alternative hypotheses about the structure of the dynamic operator model

Model No.	Model name	Transfer function of the model	Model parameters	Determination coefficient, %
1	P1D	$G(s)=\frac{K_P}{1+T_{P1}\cdot s}\cdot e^{-T_d\cdot s}$	$K_p=1.0027$; $Tp1=0.701$; $T_d=0.297$	94.5
2	P2DU	$G(s)=\frac{K_P}{1+2\cdot\xi\cdot T_W\cdot s+(T_W\cdot s)^2}\cdot e^{-T_d\cdot s}$	$K_p=1.0002$; $TW=0.5149$; $\xi=0.91767$; $Td=0.35$	94.52
3	P3DU	$G(s)=\frac{K_P}{(1+2\cdot\xi\cdot T_W\cdot s+(T_W\cdot s)^2)\cdot(1+T_{P3}\cdot s)}\cdot e^{-T_d\cdot s}$	$K_p=1.0008$; $TW=0.4448$; $T_{P3}=0.0821$; $\xi=0.99445$; $T_d=0$	95.6

component can be easily determined. This deviation represents the remnant component of the human-operator response.

The transfer function of the first part of the remnant component can be expressed as follows

$$W_R(s)=\frac{K_P}{s^2+2\cdot\xi\cdot\omega_1\cdot s+\omega_1^2}\cdot e^{-T_d\cdot s}.$$

The structure and parameters of this transfer function were selected using empirical methods.

Finally, we obtain the following transfer function for the deterministic part of the operator response

$$G(s)=\left(\frac{K_P}{1+T_{P1}\cdot s}+\frac{K_P}{s^2+2\cdot\xi\cdot\omega_1\cdot s+\omega_1^2}\right)\cdot e^{-T_d\cdot s}.$$

Mathematical modeling of an excavator's electromechanical system, considering the influence of the human operator. In the authors' previous work [7], a comprehensive mathematical model of the excavator's electromechanical system, equipped with a Leonard system electric drive, was developed.

The well-known mathematical model was modified by incorporating an additional element into the direct control loop – a dynamic link that describes the actions of the human-operator.

A new model of a complete electromechanical system of an excavator equipped with "thyristor converter – motor" electric drive was also developed.

The technical specifications of the electrical equipment for the EKG-8I excavator, essential for developing its mathematical model, are provided in [24].

Fig. 4 illustrates the proposed models of the excavator's electromechanical system, incorporating various types of electric drives and supplemented by a mathematical representation of the human operator.

Comparative diagrams in Fig. 5 depict the execution of a specified technological cycle alongside energy consumption profiles for the excavator equipped with different electric drive types.

Regression models of technical and economic indicators of the excavator production cycle. The change in the excavator operator's level of training, as well as the influence of the operator's psychophysiological state on his performance, can be taken into account by modifying the parameters of the deterministic part of the human-operator transfer function: the operator time constant TP1 and the transport delay constant TD.

To study the influence of the human-operator on the technical and economic indicators of the technological operation of the excavator, a two-factor experiment was developed and conducted on the previously proposed mathematical models of excavators. The experimental planning method was applied. The following characteristics of the operator's transfer function were selected as factors influencing the result of the experiment: the operator's time constant TP1 and the transport delay constant TD.

The following indicators were chosen as experiment's response variables: duration of the technological cycle TC, sec; and energy consumption consumed by the excavator to complete the technological cycle E, kVA · h.

The results of the performed two-factor experiment are presented in Table 2.

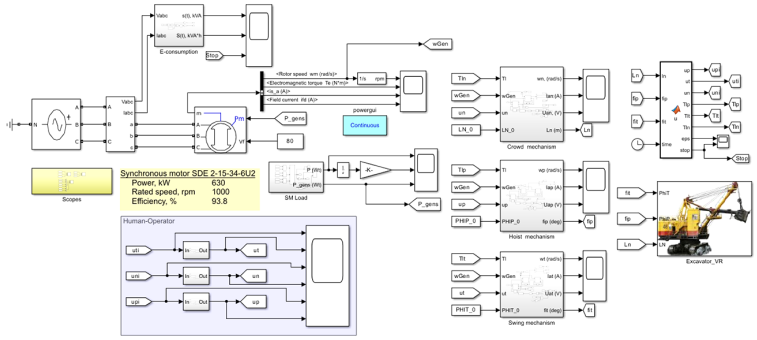

a

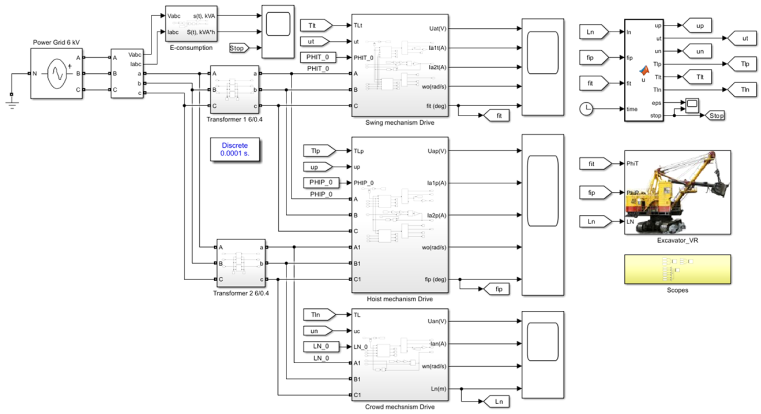

b

Fig. 4. Mathematical models of the complete electromechanical system of the excavator:
a – for the "generator-motor" system; b – for the "thyristor converter-motor" system

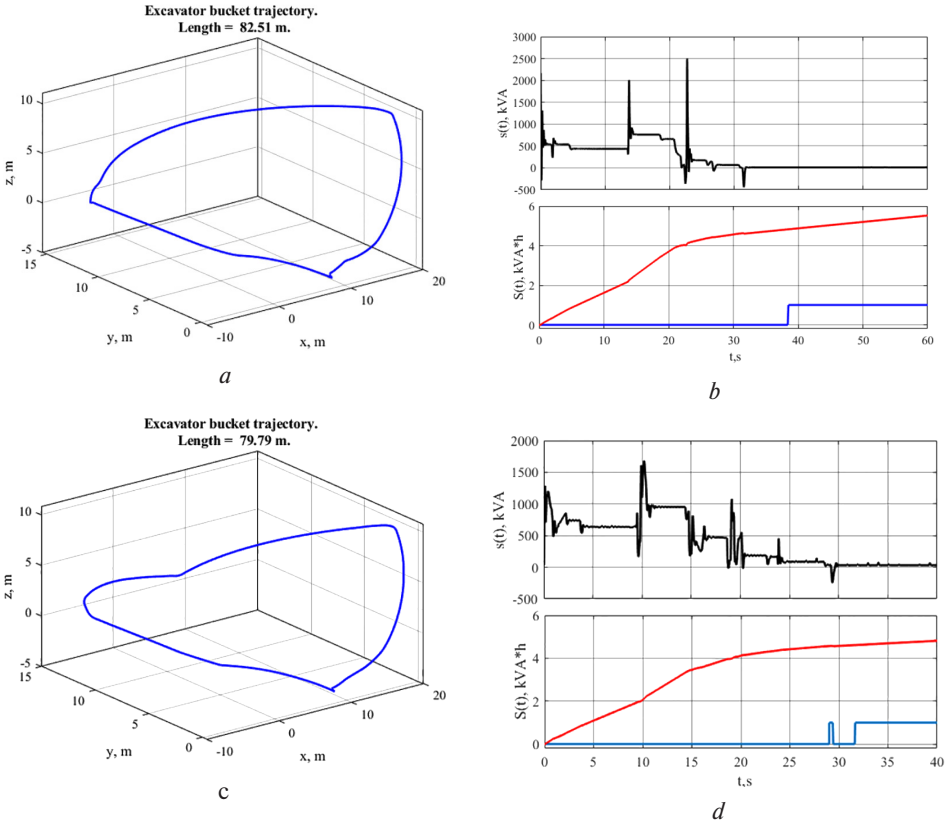

a *b*

c *d*

Fig. 5. Comparative time diagrams of the technological cycle execution for an excavator with different types of electric drives:
a – spatial movement of the bucket, G-M; b – full power and consumed electricity, G-M; c – spatial movement of the bucket, TC-M; d – full power and consumed electricity, TC-M

Table 2

Two-factor experiment on the influence of operator characteristics on the excavator's technological cycle performance

PARAMETERS					GM response		THC response	
No	$X1$	$X2$	T_{P1}	T_D	E	T_C	E	T_C
1	2	3	4	5	1	2	1	2
1	0.707	0.707	4.28215	4.28215	5.433	45.05	5.423	41.8
2	–0.707	0.707	0.81785	4.28215	5.372	45.58	5.333	39.75
3	0.707	–0.707	4.28215	0.81785	5.005	37.41	4.957	34.78
4	–0.707	–0.707	0.81785	0.81785	4.887	38.75	4.832	33.2
5	–1	0	0.1	2.55	5.117	41.83	4.989	35.84
6	1	0	5	2.55	5.452	45.68	5.405	43.502
7	0	1	2.55	5	5.518	46.8	5.544	39.164
8	0	–1	2.55	0.1	4.72	36.7	4.702	29.181
9	0	0	2.55	2.55	5.261	41.93	5.192	34.289

The results of the two-factor experiment were processed using the STATGRAPHICS software. As a result of processing the mathematical experiment results, second-order regression models were obtained for the dependences of the cyclic energy consumption E and the duration of the technological operation of the excavator TC on the operator's time constant T_{P1} and the time constant of transport delay T_D. These regression models were determined for an excavator equipped with a Leonard electric drive and a "thyristor converter – motor" electric drive. The visualization of the obtained regression models is presented in Fig. 6.

Below is the equation of the obtained regression models.

Dependence of the cyclic energy consumption of an excavator with an electric drive according to the Leonard system

$$E_L = 4.5762 + 0.0509 \cdot T_{P1} + 0.2918 \cdot T_D + 0.0016 \cdot T_{P1}^2 + \\ + 0.00475 \cdot T_{P1} \cdot T_D - 0.0260 \cdot T_D^2.$$

The model's coefficient of determination is equal to $R = 92.25$ %.

Dependence of the duration of the technological operation of an excavator with an electric drive according to the Leonard system

$$TC_L = 37.0603 - 1.0172 \cdot T_{P1} + 2.5032 \cdot T_D + \\ + 0.2163 \cdot T_{P1}^2 + 0.0675 \cdot T_{P1} \cdot T_D - 0.1177 \cdot T_D^2.$$

The model's coefficient of determination is equal to $R = 79.90$ %.

Dependence of the cyclic energy consumption of an excavator with an electric drive on the "thyristor converter – motor" system

$$E_T = 4.5331 + 0.0712 \cdot T_{P1} + 0.2319 \cdot T_D + 0.0011 \cdot T_{P1}^2 + \\ + 0.0029 \cdot T_{P1} \cdot T_D - 0.0135 \cdot T_D^2.$$

The model's coefficient of determination is equal to $R = 90.49$ %.

Dependence of the duration of the technological operation of an excavator with an electric drive on the "thyristor converter – motor" system

$$TC_T = 32.9908 - 3.8246 \cdot T_{P1} + 1.8012 \cdot T_D + 0.9350 \cdot T_{P1}^2 + \\ + 0.0392 \cdot T_{P1} \cdot T_D + 0.0190 \cdot T_D^2.$$

The model's coefficient of determination is equal to $R = 88.87$ %.

For all obtained regression models, the coefficient of determination is more than 80 %, indicating a satisfactory correspondence of the regression models to the experimental research results.

ANOVA tables were used to check the variability of all responses for each effect. Statistical significance for each effect was tested by comparing the mean square with the experimental error estimate. For all responses, all effects have P-values greater than 0.05, indicating that they are significantly different from zero at the 95.0 % confidence level.

It was established that the cyclic energy consumption of an excavator practically does not depend on the type of electric drive, since the majority of the consumed electrical energy is spent on moving the elements of the mechanical part of the excavator, and additional losses in electric drives of different types are comparable in value.

Fig. 6 shows comparative graphs of the dependence of the technological cycle duration on the characteristics of the operator for the two considered electric drive systems.

A comparative analysis of the results of mathematical modeling for different electric drive systems was performed. The energy consumption of an excavator during a technological cycle practically does not depend on the type of electric drive. The duration of the technological cycle of an excavator equipped with a TC-M electric drive is significantly (up to 25 %) shorter than for an excavator with a G-M electric drive, which is due to the lower inertia of the TC-M electric drive control channel.

Conclusion. A typical example of ergatic systems in the mining industry are excavators, whose operation is

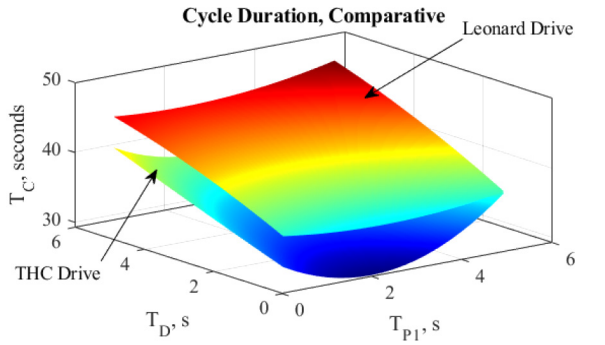

Fig. 6. Comparison of regression model surfaces for the duration of the technological cycle for different types of excavator drive systems

controlled by a human-operator. The human-operator of the excavator performs not only the function of developing the optimal trajectory of movement of the working bodies of the excavator, but also carries out a sequence of actions aimed at implementing the chosen trajectory. In ergatic systems of the mining industry, the negative influence of the human-operator is manifested in the form of the impact of the qualifications of the human-operator on the technical and economic performance indicators of the production processes.

Based on the experimental studies of human-operator actions, structural and parametric dynamic identification of the human-operator transfer function was carried out.

Mathematical models have been developed for the electromechanical system of an excavator equipped with two types of electric drives: a "generator – motor" system and a "thyristor converter – motor" system. These models incorporate a closed-loop control system for the excavator bucket position. The control circuits for the main excavator mechanisms take into account the human-operator's transfer function. To facilitate the experimental study of these mathematical models, a central rotatable composite design was formulated using design of experiment methods.

Based on the results of processing the mathematical modeling results, regression dependences of the cyclic energy consumption and the duration of the technological operation of the excavator on the operator's time constant T_{P1} and the operator's transport delay time constant T_D were obtained.

It was established that the cyclic energy consumption of an excavator depends to a small extent on the type of electric drive, since the main part of the consumed electricity is spent on moving the elements of the mechanical part of the excavator, which depends solely on the shape of the bucket's trajectory.

It was found that the technological cycle of an excavator equipped with a thyristor converter-motor electric drive is significantly shorter – by up to 25 % – compared to an excavator with a generator-motor electric drive. This reduction is attributed to the higher speed of the thyristor converter-motor system.

The relationship between energy consumption and the duration of the excavator's technological cycle, in relation to the parameters of the operator's transfer function, exhibits a similar pattern for both types of electric drive systems considered. It was established that the transport delay time constant T_D has a more significant impact on the performance indicators of the excavator compared to the operator's reaction time constant T_{P1}.

References.

1. Zhu, H. (2019). Fundamental Models for Missions of Engineered Systems. *Systems Conference (SysCon) IEEE International*, 1-6. https://doi.org/10.1109/syscon.2019.8836714

2. Korobiichuk, I., Tokar, A., Danik, Y., & Katuha, V. (2019). Evaluation methods for the ergatic system reliability operator. *Automation 2019: progress in automation, robotics and measurement techniques, 920*(2020), 560-570. https://doi.org/10.1007/978-3-030-13273-6_52

3. Strauch, B. (2018). *Investigating Human Error: Incidents, Accidents, and Complex Systems* (*1st* ed.). Routledge. https://doi.org/10.4324/9781315251851

4. Kletz, T., & Amyotte, P. (2019). *Accidents said to be due to human error, What Went Wrong?* (*6th* ed.), (pp. 53-172). Butterworth-Heinemann. https://doi.org/10.1016/B978-0-12-810539-9.00007-0

5. Oskouei, M.A., & Awuah-Offei, K. (2014). Statistical methods for evaluating the effect of operators on energy efficiency of mining machines. *Mining Technology, 123*(4), 175-182. https://doi.org/10.1179/1743286314Y.0000000067

6. Babaei Khorzoughi, M., & Hall, R. (2016). A Study of Digging Productivity of an Electric Rope Shovel for Different Operators. *Minerals, 6*(2), 48. https://doi.org/10.3390/min6020048

7. Tytiuk, V., Khandakji, K., Sivyakova, G., Karabut, N., Chornyi, O., & Busher, V. (2021). Determining the parameters of the trajectory of the bucket of mining quarries excavators. *E3S Web of Conferences*, 280. https://doi.org/10.1051/e3sconf/202128005013

8. Pan, X., & Wu, Z. (2020). Performance shaping factors in the human error probability modification of human reliability analysis. *International Journal of Occupational Safety and Ergonomics, 26*, 538-550. https://doi.org/10.1080/10803548.2018.1498655

9. Digiesi, S., Facchini, F., Mossa, G., & Vitti, M. (2023). A model to evaluate the Human Error Probability in inspection tasks of a production system. *Procedia Computer Science, 217*, 1775-1783. https://doi.org/10.1016/j.procs.2022.12.377

10. Rejeki, Y., Achiraeniwati, E., & Wanda, A. (2020). Measurement of operator reliability level using the Human Error Assessment and Reduction Technique (HEART) method. *IOP Conference Series: Materials Science and Engineering, 830*, 032095. https://doi.org/10.1088/1757-899X/830/3/032095

11. Manghisi, V.M., Wilhelm, M., Uva, A., Engelmann, B., Fiorentino, M., & Schmitt, J. (2023). Towards gestured-based technologies for human-centred Smart Factories. *International Journal of Computer Integrated Manufacturing, 36*(1), 110-127. https://doi.org/10.1080/0951192X.2022.2121424

12. Kulakov, A.A. (2018). Features of a Simple Psychophysiological Reaction. *Hum Physiol, 44*, 412-417. https://doi.org/10.1134/S0362119718040060

13. Logan, G.D., Van Zandt, T., Verbruggen, F., & Wagenmakers, E.-J. (2014). On the ability to inhibit thought and action: General and special theories of an act of control. *Psychological Review, 121*(1), 66-95. https://doi.org/10.1037/a0035230

14. Bekele, E., & Sarkar, N. (2014). Psychophysiological Feedback for Adaptive Human–Robot Interaction (HRI). In Fairclough, S., Gilleade, K. (Eds.). *Advances in Physiological Computing. Human–Computer Interaction Series*. Springer, London. https://doi.org/10.1007/978-1-4471-6392-3_7

15. *System Identification Toolbox* (2024). Retrieved from https://www.mathworks.com/help/ident/index.html?s_tid=srchtitle_site_search_1_System%20Identification%20toolbox

16. Sinclair, T. (2023). *Model theory of operator systems and C*-algebras. Model Theory of Operator Algebras*. Berlin, Boston: De Gruyter, 2023, pp. 343-386. https://doi.org/10.1515/9783110768282-009

17. Lincheng, Z., Li, X., Xu, H., & Zhu, P. (2015). Gradient-Based Iterative Identification for Wiener Nonlinear Dynamic Systems with Moving Average Noises. *Algorithms 8*(3), 712-722. https://doi.org/10.3390/a803071

18. Li, J. (2013). Parameter estimation for Hammerstein CARARMA systems based on the Newton iteration. *Applied Mathematics Letters, 26*(1), 91-96. https://doi.org/10.1016/j.aml.2012.03.038

19. Danaci, M., Koylu, F., & Al-Sumaidaee, Z.A. (2021). Identification of Dynamic Models by Using Metaheuristic Algorithms. *ADI Journal on Recent Innovation, 3*(1), 36-58. https://doi.org/10.34306/ajri.v3i1.492

20. Mzyk, G. (2019). Nonparametric System Identification Matlab Toolbox. *Proceedings of the 16th International Conference on Informatics in Control, Automation and Robotics, 1*, (pp. 691-698). ICINCO. ISBN 978-989-758-380-3; ISSN 2184-2809. SciTePress. https://doi.org/10.5220/0007922306910698

21. Valoušek, L., & Jalovecky, R. (2021). Use of the MATLAB® System Identification Toolbox® for the creation of specialized software for parameters identification. *2021 International Conference on Military Technologies* (*ICMT*), Brno, Czech Republic, (pp. 1-5). https://doi.org/10.1109/ICMT52455.2021.9502786

22. Bappah, A. S. (2015). Hands-on Industrial Process Modelling Using the MATLAB System Identification Toolbox. In Gen, M., Kim, K., Huang, X., Hiroshi, Y. (Eds.) *Industrial Engineering, Management Science and Applications 2015. Lecture Notes in Electrical Engineering, 349*. Springer, Berlin, Heidelberg. https://doi.org/10.1007/978-3-662-47200-2_10

23. Victor, S., & Malti, R. (2023). CRONE Toolbox for system identification and modeling using fractional differentiation models. *IFAC-PapersOnLine, 56*(2), 120-125. https://doi.org/10.1016/j.ifacol.2023.10.1556

24. Tytiuk, V., Chornyi, O., Mrachkovskyi, D., Tryputen, S., Tryputen, M., & Kuznetsov, V. (2023). Mathematical model of the closed-loop system of excavator bucket positioning. *Naukovyi Visnyk Natsionalnoho Hirnychoho Universytetu*, (1), 107-114 https://doi.org/10.33271/nvngu/2023-1/107

Оцінка впливу людини-оператора на техніко-економічні показники виробничого циклу екскаватора

В. К. Титюк[1], *Д. В. Мрачковський*[2], *О. П. Чорний*[3], *В. В. Кузнецов*[*4], *М. М. Трипутень*[5], *Г. О. Сівякова*[1]

1 – НАТ «Карагандинський індустріальний університет», м. Теміртау, Республіка Казахстан

2 – Криворізький національний університет, м. Кривий Ріг, Україна

3 – Кременчуцький національний університет імені Михайла Остроградського, м. Кременчук, Україна

4 – Український державний університет науки і технологій, м. Дніпро, Україна

5 – Національний технічний університет «Дніпровська політехніка», м. Дніпро, Україна

[*] Автор-кореспондент e-mail: witjane20002014@gmail.com

Мета. Визначення впливу параметрів передавальної функції людини-оператора на тривалість технологічної операції та циклове енергоспоживання електромеханічної системи екскаватора за схемою «пряма лопата», обладнаного електроприводами різних типів, з метою подальшого удосконалення людино-машинної системи керування кар'єрними екскаваторами шляхом компенсування інерційності й нелінійності характеристик людини-оператора.

Методика. Математичне моделювання людино-машинної системи керування екскаватором, обладнаного електроприводами різних типів, з урахуванням динамічних характеристик людини-оператора, встановлення регресійних залежностей техніко-економічних показників екскаватора від параметрів еквівалентної передавальної функції людини-оператора із застосуванням методів планування експерименту.

Результати. Реалізовані математичні моделі замкнутих систем керування положенням ковша екскаватора «пряма лопата» з електроприводом за системою Леонарда та електроприводом «тиристорний перетворювач-двигун», що відрізняються тим, що в їхній структурі враховано нелінійність і інерційність людини-оператора та її вплив на показники роботи людино-машинної системи. Із застосуванням методів теорії планування експерименту були отримані регресійні залежності тривалості технологічного циклу й циклового енергоспоживання від значень постійної часу і постійної запізнювання, що характеризують поточний стан людини-оператора. Отримані регресійні моделі дали змогу оцінити важливість впливу різних психофізіологічних чинників роботи людини-оператора на техніко-економічні показники виробничого циклу екскаватора, що може слугувати основою для подальшої оптимізації роботи кар'єрних екскаваторів.

Наукова новизна. Уперше запропоновані математичні моделі електромеханічної системи екскаватора за схемою «пряма лопата», що включають моделі електроприводів основних механізмів, модель механічної частини екскаватора й модель людини-оператора, що дало змогу підвищити точність визначення енергоспоживання екскаватора й часу виконання експлуатаційного циклу. Отримані регресійні моделі залежності техніко-економічних показників виробничого циклу екскаватора від запізнювання та інерційності людини-оператора. Встановлено, що більш впливовим фактором є транспортне запізнювання.

Практична значимість. Розроблені математичні моделі екскаватора з електроприводом за системою «генератор-двигун» і електроприводом за системою «тиристорний перетворювач-двигун-двигун», що включають модель механічної частини екскаватора та модель людини-оператора. Отримані регресійні моделі залежності тривалості виробничого циклу екскаватора та його енергоспоживання від запізнювання й інерційності людини-оператора. Запропонована реалізація людино-машинної системи керування екскаватором створює передумови для подальшого підвищення рівня автоматизації кар'єрних екскаваторів.

Ключові слова: *людино-машинна система, оператор, екскаватор «пряма лопата», робочий цикл*

The manuscript was submitted 24.12.24.